TITLE 1
TITLE 2
XR200 SYSTEM

DRAWING REVISION SCHEDULE				
Sheet Number	Sheet Name		Rev 1 05.14.2020	Rev 2 07.22.2024
SX-0.01	COVER		X	X
~~SX-0.02~~	~~XR200™ DESIGN CRITERIA / LOAD MAP~~	DELETED		
~~SX-0.03~~	~~XR200™ ABBREVIATIONS & NOMENCLATURES~~	DELETED	X	
~~SX-0.04~~	~~XR200™ GENERAL NOTES & SPECIFICATIONS~~	DELETED		
~~SX-0.05~~	~~XR200™ MATERIAL SPECIFICATIONS~~	DELETED		
SX-0.09	XR200™ NOTES AND NOMENCLATURE			X
SX-0.10	XR200™ COLLAR DETAILS			X
SX-3.10	XR200™ MOMENT COLUMN DETAILS		X	X
SX-3.20	XR200™ GRAVITY COLUMN DETAILS		X	X
SX-4.10	XR200™ MOMENT BEAM DETAILS		X	X
SX-4.11	XR200™ STABILITY BRACING DETAILS		X	X
SX-4.20	XR200™ DROP-IN GRAVITY BEAM DETAILS		X	X
SX-4.21	XR200™ CONVENTIONAL GRAVITY BEAM DETAILS		X	X
SX-4.22	XR200™ COLLAR CONNECTION DETAILS			X
SX-4.30	XR200™ BEAM ROUND WEB OPENING DETAILS			
~~SX-5.10~~	~~XR200™ DECKING DETAIL~~	DELETED		
~~SX-5.20~~	~~XR200™ DECK OPENINGS~~	DELETED		
SX-5.30	XR200™ BENT PLATE DETAILS			X
SX-9.10	ROOF SCREEN ELEVATIONS & DETAILS			X

CONXTECH®
Simply Faster

CA Contractor's License No. 855525
6600 Koll Center Parkway
Suite 210
Pleasanton, CA 94566

T 510.264.9111
F 510.264.1181
www.ConXtech.com

PROFESSIONAL SEAL:

REVISIONS:

NO.	DATE:	DESCRIPTION:
1	05/14/2020	SDR 033.
2	07/22/2024	SDR 0054

PROJECT ADDRESS:

PLAN SET STATUS:

TITLE: COVER

ISSUE DATE: 07/22/2024

PROJECT NO.:

SCALE:

SHEET NO.

SX-0.01

PRINTED ON:
9/4/2024 1:13:16 PM

R:\ConXCAD\1.0 ConXR200 Drawings\1.3 Revit\1.1.3.1 Current\2024.07.22_Rev2_SDR-0054\XR200_Rev2.rvt

GENERAL NOTES

1. USE OF THE CONXR SYSTEM IS SUBJECT TO THE APPROVAL OF THE GOVERNING BUILDING CODE AND THE AUTHORITY HAVING JURISDICTION.
2. THE CONXR MOMENT CONNECTION IS QUALIFIED VIA AISC 341 SECTION E3.6C.(C) USING CYCLIC QUALIFICATION TESTS IN ACCORDANCE WITH AISC 341 SECTION K2. THE CONXR MOMENT CONNECTION MAY BE USED TO CONNECT BEAMS AND COLUMNS IN SPECIAL MOMENT FRAME (SMF) AND INTERMEDIATE MOMENT FRAME (IMF) SYSTEMS. DESIGN OF SMF AND IMF SYSTEMS MUST COMPLY WITH THE REQUIREMENTS OF AISC 341 CHAPTER E.
3. SMF BEAMS USING THE XR200 COLLAR MUST BE W12 PROFILES. CYCLIC QUALIFICATION TESTS WERE PERFORMED ON BEAM SIZES RANGING FROM W12X19 (BOTH RBS & NON-RBS) TO W12X30 (RBS ONLY). MAXIMUM RECOMMENDED SMF BEAM SIZE IS W12X30.
4. ALL STRUCTURAL STEEL IN THE CONXR SYSTEM SHALL CONFORM TO THE FOLLOWING MATERIAL REQUIREMENTS UNLESS OTHERWISE NOTED IN THE CONTRACT DOCUMENTS. REFER TO SHEET SX-0.10 FOR COLLAR COMPONENT MATERIAL AND COATING REQUIREMENTS.

WIDE-FLANGE AND WT SHAPES	ASTM A992,	FY=50 KSI
PLATES	ASTM A36 OR A572 GR.50	FY=36 KSI (A36), 50 KSI (A572 GR. 50)
ANGLES, CHANNELS, MISC CHANNELS	ASTM A36 OR A572 GR.50	FY=36 KSI (A36), 50 KSI (A572 GR. 50)
GRAVITY HSS COLUMNS	ASTM A500 GR. B OR C	FY=46 KSI (GR. B), 50 KSI (GR. C)
CONX SQUARE HSS MOMENT COLUMNS	ASTM A500 GR. C	FY=50 KSI (SEE NOTE 5)

5. WHEN THE CONXR COLLAR IS USED AS THE MOMENT CONNECTION IN AN SMF SYSTEM, THE CONTRACTOR'S QC PLAN SHALL INCLUDE A REQUIREMENT THAT HSS COLUMNS THAT ARE PART OF THE SFRS SHALL HAVE A MINIMUM COUPON YIELD STRESS (Fa) INDICATED ON THE MILL CERTIFICATION. FOR COUPON YIELD STRESS (Fa) REQUIREMENTS GREATER THAN THE SPECIFIED MINIMUM YIELD STRESS OF THE MATERIAL, REFER TO THE COLUMN LAYOUT PLAN OR COLUMN SCHEDULE.
6. CONXR COLLAR BOLTS ARE PRETENSIONED TO THE REQUIREMENTS OF ASTM F3125 GRADE A490. REFER TO SHEET SX-0.10 FOR ADDITIONAL MATERIAL AND COATING REQUIREMENTS FOR THE COLLAR BOLTS.
7. MACHINED BOLTS SHALL BE ASTM A307 OR BETTER .
8. HIGH-STRENGTH BOLTS SHALL BE ASTM F3125 GR. A325 OR BETTER INSTALLED SNUG-TIGHT UNLESS NOTED OTHERWISE; REFER TO GENERAL STRUCTURAL NOTES FOR ADDITIONAL REQUIREMENTS.
9. CONTRACTOR'S OPTION TO USE TWIST-OFF TYPE BOLTS FOR HIGH-STRENGTH BOLTS IN PRETENSIONED AND SLIP-CRITICAL APPLICATIONS.
10. REDUCED BEAM SECTION (RBS) FLANGE CUTS SHALL BE FABRICATED IN ACCORDANCE WITH AISC 358 SECTION 5.7.
11. REFER TO SHEET SX-4.11 FOR STABILITY BRACING DETAILS FOR BEAMS THAT ARE PART OF THE SFRS.
12. HSS COLUMNS THAT ARE PART OF THE SFRS IN SMF AND IMF SYSTEMS SHALL BE COMPLETELY FILLED WITH STRUCTURAL CONCRETE. REFER TO GENERAL STRUCTURAL NOTES FOR CONCRETE MATERIAL REQUIREMENTS.
13. GROUT FOR COLUMN BASE PLATES SHALL BE PLACED AND ITS COMPRESSIVE STRENGTH SHALL REACH AT LEAST 3,000 PSI PRIOR TO PLACING CONCRETE FOR ELEVATED FLOORS.

CONXR ACRONYMS & SYMBOLS

BWA	BEAM WEB ANGLE
BWP	BEAM WEB PLATE
CWP	COLUMN WEB PLATE
DTI	DIRECT TENSION INDICATOR
Fa	COUPON YIELD STRESS
GSN	GENERAL STRUCTURAL NOTES
HRC	HARDNESS ROCKWELL C
IMF	INTERMEDIATE MOMENT FRAME
RBS	REDUCED BEAM SECTION
SFRS	SEISMIC FORCE RESISTING SYSTEM
SHCS	SOCKET-HEAD CAP SCREW
SMF	SPECIAL MOMENT FRAME

COLUMN NOMENCLATURE

CG = HSS GRAVITY COLUMN

CM = HSS8x8 CONXR MOMENT COLUMN

C = COLUMN (MEMBER TYPE)

BEAM NOMENCLATURE

BMM - PROFILE
BMG - PROFILE
BGM - PROFILE
BMC - PROFILE
BCM - PROFILE
BGG - PROFILE
BGC - PROFILE
BCG - PROFILE

BEAM PROFILE: W12

CONNECTION TYPE FAR END (RIGHT)
CONNECTION TYPE NEAR END (LEFT)

CONNECTION TYPE LEGEND

C = CANTILEVER BEAM TO BEAM OR BEAM TO COLUMN MOMENT CONN. (FULLY RESTRATINED)

G = GRAVITY BEAM TO BEAM OR BEAM TO COLUMN CONN. (PINNED)

M = CONXL BEAM TO COLUMN MOMENT CONN. (FULLY RESTRAINED)

B=BEAM (MEMBER TYPE)

XR200 MOMENT COLLAR NOMENCLATURE

CONX CONNECTION TYPE LEGEND: (TYPES: I=INNER, O=OUTER) (SEE SHEET SX-0.10)

XR200-OC XR200 OUTER COLLAR :

XR200-IC XR200 INNER COLLAR

PROPRIETARY INFORMATION NOTICE

Structures, details, methodologies, concepts of ConXtech (ConX®) connections illustrated and described in this document are covered by various forms of intellectual property protections considered by ConXtech to be of great value. These protections include, but are not limited to, copyrights, and the following U.S. and Foreign Patents which variously cover ConXtech's ConX® structures and methodologies: Covered by U.S. P.N. 6,837,016; 7,021,020; 7,051,917 & 7,127,863; Australia P.N. 2001288615 & P.N. 2004319371; Canada P.N. 2,458,706; China P.N. ZL 01 8 23730.4 & ZL 2004 8 00428622.5; Japan P.N. 4165648 & 4427080; Mexico P.N. 262499 & 275284; Hong Kong P.N. 1102268; Canada P.N. 2,564,195. Other U.S. & Foreign Patents Pending. You may contact ConXtech at info@conxtech.com or Tel. 510-264-9111.
Copyright © 2012 ConXtech, Inc. All rights reserved.

CONXTECH®
Simply Faster

CA Contractor's License No. 855525
6600 Koll Center Parkway
Suite 210
Pleasanton, CA 94566

T 510.264.9111
F 510.264.1181
www.ConXtech.com

PROFESSIONAL SEAL:

REVISIONS:

NO.	DATE:	DESCRIPTION:
1	05/14/2020	SDR 033.
2	07/22/2024	SDR 0054

PROJECT ADDRESS:

PLAN SET STATUS:

TITLE: **XR200™ NOTES AND NOMENCLATURE**

ISSUE DATE: 07/22/2024

PROJECT NO.:

SCALE: As indicated

SHEET NO.

SX-0.09

PRINTED ON:
9/4/2024 1:13:17 PM

R:\ConXCAD\1.0 ConXR200 Drawings\1.3 Revit\1.1.3.1 Current\2024.07.22_Rev2_SDR-0054\XR200_Rev2.rvt

COMPONENT	MATERIAL SPECIFICATION	RECOMMENDED HARDWARE COATING WHEN REQUIRED
INNER COLLAR	A572 GRADE 50	NONE
OUTTER COLLAR	A572 GRADE 50	NONE
SOCKET HEAD CAP SCREW	A574 (SEE NOTES BELOW)	ZN/AL INORGANIC PROTECTIVE COATING PER ASTM F1136 GRADE 3
HEAVY HEX NUTS	A563	ZN/AL INORGANIC PROTECTIVE COATING PER ASTM F1136 GRADE 5
FLAT WASHER	F436	ZN/AL INORGANIC PROTECTIVE COATING PER ASTM F1136 GRADE 3
DTI WASHER	F959	NONE

NOTES:
1. CONXR COLLAR BOLTS ARE ASTM A574 SOCKET-HEAD CAP SCREWS (SHCS) WITH THE FOLLOWING SUPPLEMENTAL REQUIREMENTS:
   A. THE REQUIRED MECHANICAL HARDNESS RANGE LISTED IN ASTM A574 TABLE 1, MECHANICAL REQUIREMENTS, SHALL BE LIMITED TO 36 - 40 HRC.
   B. VISUAL INSPECTION OF SHCS PERFORMED IN COMPLIANCE WITH ASTM A574 AND ASTM F788 SHALL INCLUDE PREVENTION PROCESS SAMPLE TESTING OF BOLT LOTS FOR SURFACE DISCONTINUITIES AT THE SOCKET HEAD TO BOLT SHANK INTERSECTION FOLLOWING ASTM F3125 SECTION 12.1, MAGNETIC PARTICLE INSPECTION REQUIREMENTS.
   C. STRENGTH TESTING SHALL BE PERFORMED ON FULL-SIZE SPECIMENS: MACHINED SPECIMENS ARE PROHIBITED.

COLLAR COMPONENT MATERIAL REQUIREMENTS — SCALE: 1 1/2" = 1'-0" — **13**

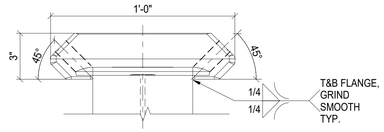

6B XR200 - OUTER COLLAR DETAIL - PLAN (TOP)
3" = 1'-0"

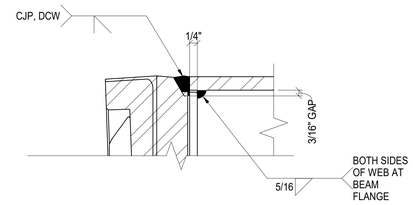

6C BEAM FLANGE TO COLLAR CONNECTION
6" = 1'-0"

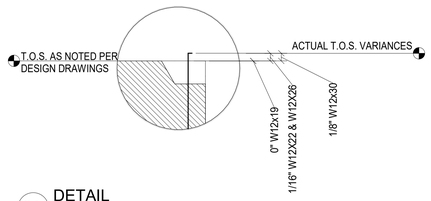

2A DETAIL
12" = 1'-0"

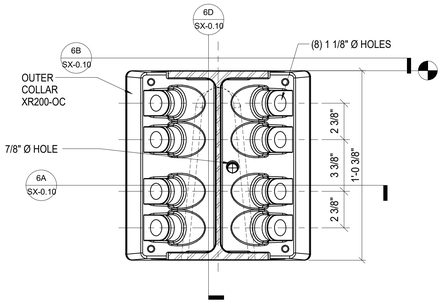

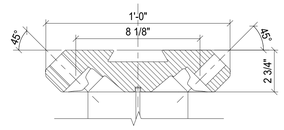

6A XR200 - OUTER COLLAR DETAIL - PLAN (BOTTOM)
3" = 1'-0"

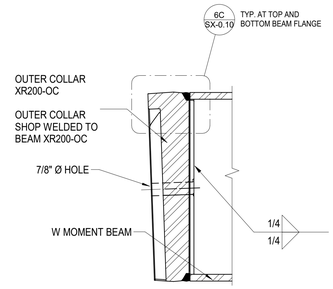

6D BEAM TO MOMENT COLLAR CONNECTION ELEVATION
3" = 1'-0"

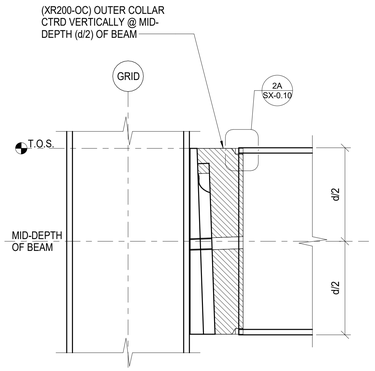

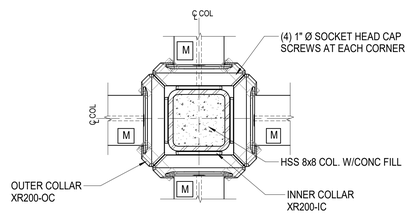

NOTES:
1. 4 MOMENT BEAMS SHOWN, ACTUAL QUANTITY MAY VARY. SEE PLANS.

XR200 COLLAR PLAN — SCALE: 1 1/2" = 1'-0" — **14**

XR200 OUTER COLLAR ELEVATION — SCALE: 3" = 1'-0" — **6**

TOP OF STEEL VARIANCES — SCALE: 3" = 1'-0" — **2**

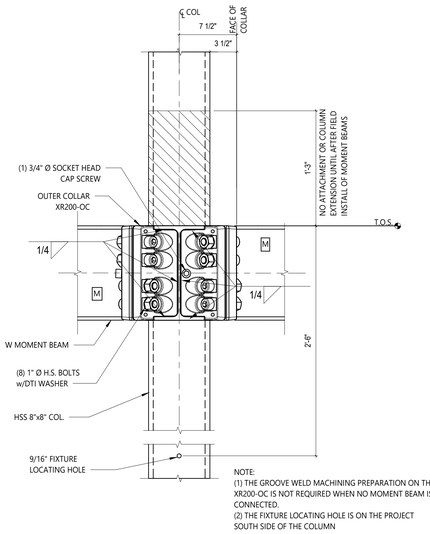

NOTE:
(1) THE GROOVE WELD MACHINING PREPARATION ON THE XR200-OC IS NOT REQUIRED WHEN NO MOMENT BEAM IS CONNECTED.
(2) THE FIXTURE LOCATING HOLE IS ON THE PROJECT SOUTH SIDE OF THE COLUMN

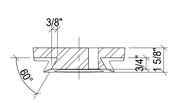

DIMENSIONS VARY WITH TAPER. MAX. DIMENSIONS SHOWN

8B SECTION
3" = 1'-0"

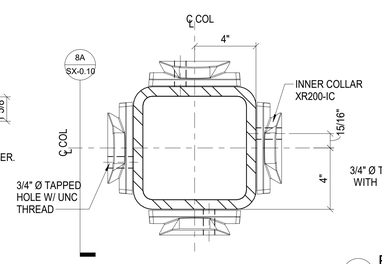

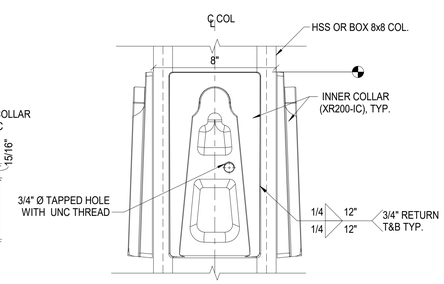

8A ELEVATION
3" = 1'-0"

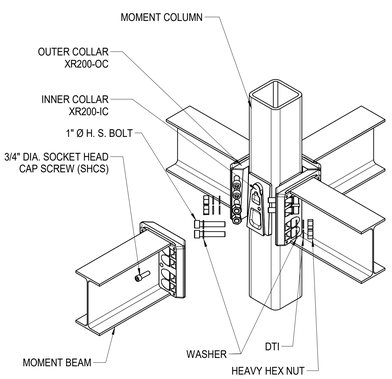

XR200 COLLAR ELEVATION — SCALE: 1 1/2" = 1'-0" — **16**

XR200 INNER COLLAR TO COLUMN CONNECTION — SCALE: 3" = 1'-0" — **8**

XR200-COLLAR EXPLODED ISOMETRIC — SCALE: 1" = 1'-0" — **4**

CONXTECH®
Simply Faster
CA Contractor's License No. 855525
6600 Koll Center Parkway
Suite 210
Pleasanton, CA 94566
T 510.264.9111
F 510.264.1181
www.ConXtech.com

PROFESSIONAL SEAL:

REVISIONS:

NO.	DATE:	DESCRIPTION:
2	07/22/2024	SDR 0054

PROJECT ADDRESS:

PLAN SET STATUS:

TITLE: **XR200™ COLLAR DETAILS**

ISSUE DATE: 07/22/2024

PROJECT NO.:

SCALE: As indicated

SHEET NO. **SX-0.10**

PRINTED ON: 9/4/2024 1:13:19 PM

R:\ConXCAD\1.0 ConXR200 Drawings\1.3 Revit\1.1.3.1 Current\2024.07.22_Rev2_SDR-0054\XR200_Rev2.rvt

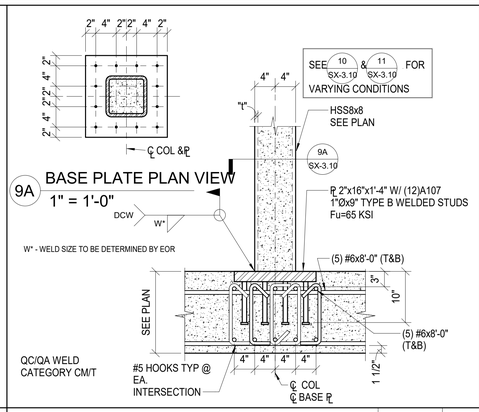

COLUMN BASE CONNECTION SCALE: 1" = 1'-0" **9**

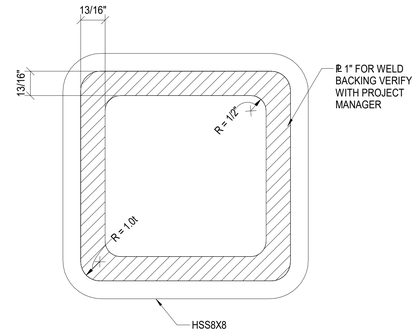

WELD BACKING PLATE OPTION SCALE: 6" = 1'-0" **5**

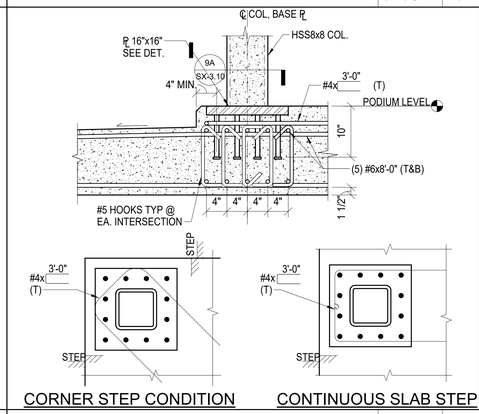

BASE PLATE DETAIL @ SLAB STEP SCALE: 1" = 1'-0" **10**

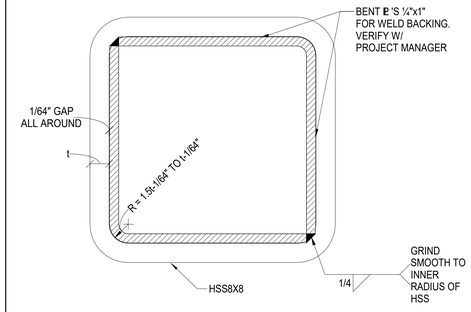

WELD BACKING BENT PLATE OPTION SCALE: 6" = 1'-0" **6**

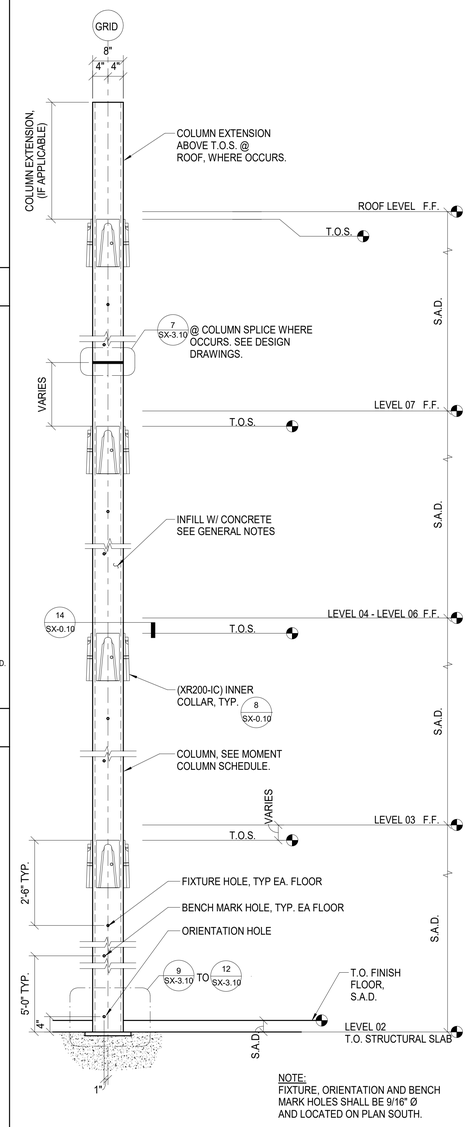

MOMENT COLUMN ELEVATION SCALE: 3/4" = 1'-0" **4**

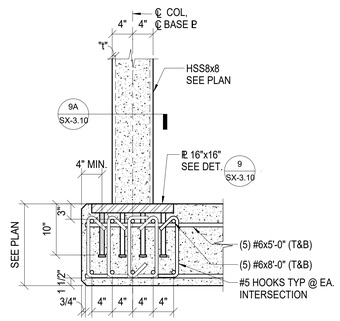

FIXED MOMENT FRAME COLUMN BASE CONNECTION @ EDGE OF SLAB SCALE: 1" = 1'-0" **11**

MOMENT COLUMN SPLICE SCALE: 1 1/2" = 1'-0" **7**

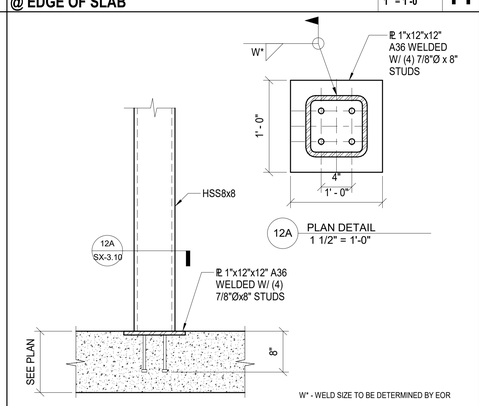

PIN MOMENT FRAME COLUMN BASE DETAIL SCALE: 1" = 1'-0" **12**

CONXTECH
Simply Faster
CA Contractor's License No 855525
6600 Koll Center Parkway
Suite 210
Pleasanton, CA 94566
T 510.264.9111
F 510.264.1181
www.ConXtech.com

PROFESSIONAL SEAL:

REVISIONS:

NO.	DATE:	DESCRIPTION:
2	07/22/2024	SDR 0054

PROJECT ADDRESS:

PLAN SET STATUS:

TITLE: **XR200™ MOMENT COLUMN DETAILS**

ISSUE DATE: 07/22/2024

PROJECT NO.:

SCALE: As indicated

SHEET NO.

SX-3.10

PRINTED ON: 9/4/2024 1:13:21 PM

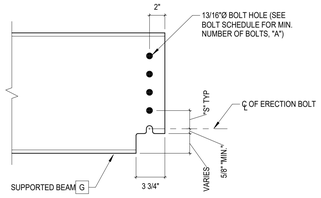

NOTES

1. FOR BOLT SCHEDULE SEE TABLE 3/SX-3.20

GRAVITY BEAM COPED BOTTOM FLANGE

SCALE: 1 1/2" = 1'-0" | 17

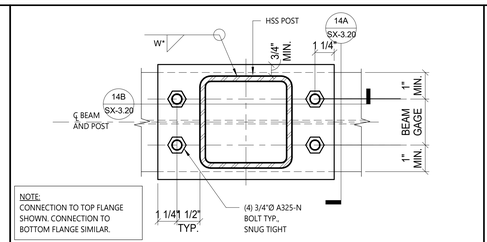

NOTE:
CONNECTION TO TOP FLANGE SHOWN. CONNECTION TO BOTTOM FLANGE SIMILAR.

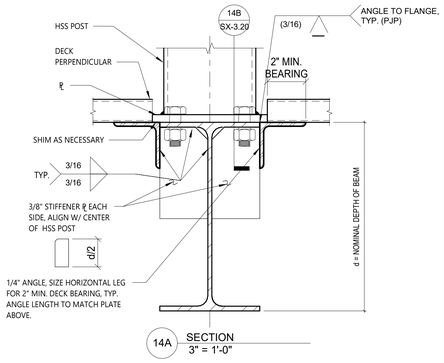

14A SECTION
3" = 1'-0"

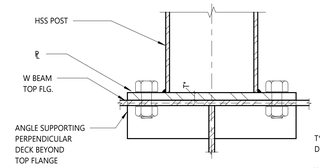

T* - PLATE THICKNESS TO BE DETERMINED BY EOR.

W* - WELD SIZE TO BE DETERMINED BY EOR.

14B SECTION
3" = 1'-0"

GRAVITY POST TO BEAM CONNECTION

SCALE: 3" = 1'-0" | 14

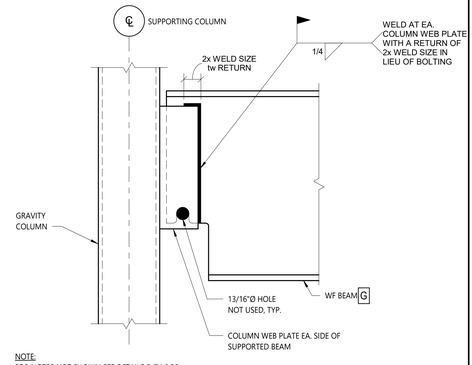

NOTE:
FOR NOTES NOT SHOWN SEE DETAILS 5/SX-3.20.

ALTERNATE WELDED BEAM TO GRAVITY COLUMN CONNECTION

SCALE: 3" = 1'-0" | 9

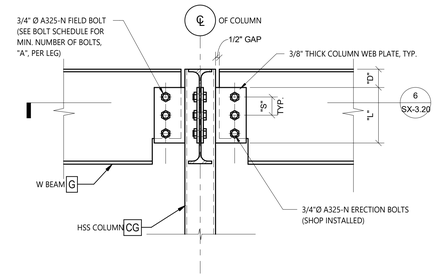

NOTES:
1) FOR COLUMN WEB PLATE DEMENSIONS AND BOLT SCHEDULE SEE DETAILS 7/SX-3.20 & 3/SX-4.20
2) FOR GRAVITY BEAM BOTTOM FLANGE COPE DIMENSIONS SEE DETAIL 6/SX-4.20

BEAM TO GRAVITY COLUMN DETAIL

SCALE: 1 1/2" = 1'-0" | 5

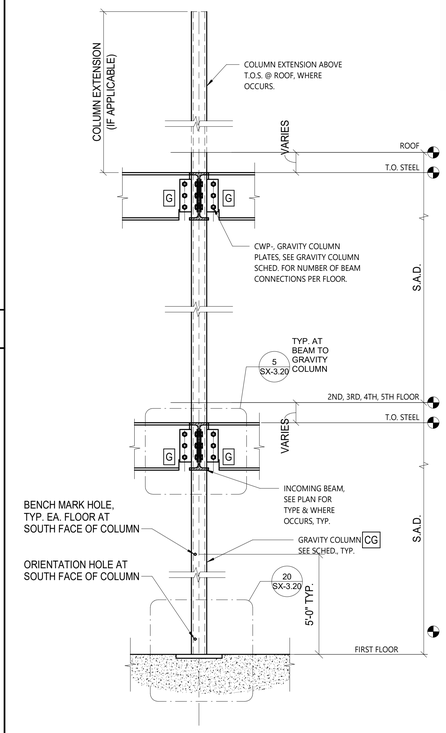

CG GRAVITY COLUMN ELEVATION

SCALE: 3/4" = 1'-0" | 2

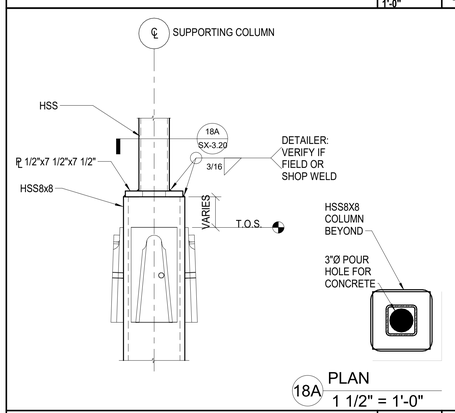

18A PLAN
1 1/2" = 1'-0"

XR200 GRAVITY COLUMN OVER MOMENT COLUMN

SCALE: 1 1/2" = 1'-0" | 18

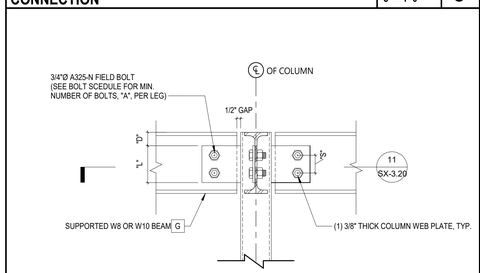

NOTES

1. FOR NOTES NOT SHOWN SEE 5/SX-3.20

W8 AND W10 BEAM TO GRAVITY COLUMN DETAIL

SCALE: 1 1/2" = 1'-0" | 10

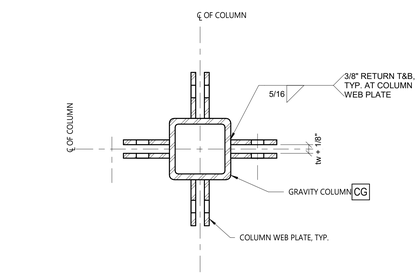

NOTES:
1) BEAMS NOT SHOWN FOR CLARITY
2) 4 BEAM TO COLUMN CONNECTION SHOWN. SEE PLANS FOR ACTUAL NUMBER OF CONNECTIONS

SECTION BEAM TO GRAVITY COLUMN

SCALE: 3" = 1'-0" | 6

COLUMN WEB PLATE (CWP) DIMENSIONS				
INCOMING BEAM	"L" CLIP LENGTH (IN)	"A" NUMBER OF BOLTS	"S" BOLT SPACING (IN)	"D" T.O.S. TO EDGE OF CLIP (IN)
W8"	4 13/16"	2"	2 5/16"	1 3/4"
W10"	4 13/16"	2"	2 5/16"	1 3/4"
W12	7 1/8	3	2 5/16	1 3/4
W14	9 7/16	4	2 5/16	1 3/4
W16	11 3/4	5	2 5/16	1 3/4

NOTES:

1. *FOR W8 AND W10 INCOMING BEAMS IN A BEAM TO COLUMN GRAVITY CONNECTION, USE DETAIL 10/SX-3.20.
2. IN CONDITIONS WHERE k REGION OF SUPPORTING BEAM IS ENCROACHED BY THE CWPS, ADJUST "D" VALUE SO CWPS ARE CLEAR OF THIS REGION.

CG GRAVITY COLUMN ELEVATION

SCALE: 3/4" = 1'-0" | 2

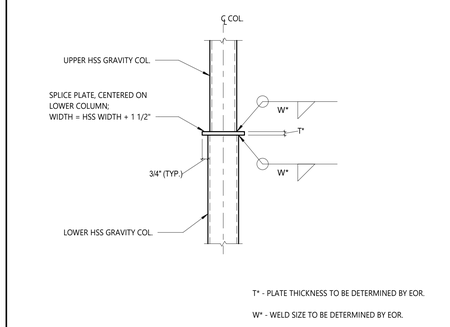

T* - PLATE THICKNESS TO BE DETERMINED BY EOR.

W* - WELD SIZE TO BE DETERMINED BY EOR.

GRAVITY COLUMN SPLICE FOR HSS OF DIFFERING OUTER DIMENSIONS

SCALE: 1 1/2" = 1'-0" | 19

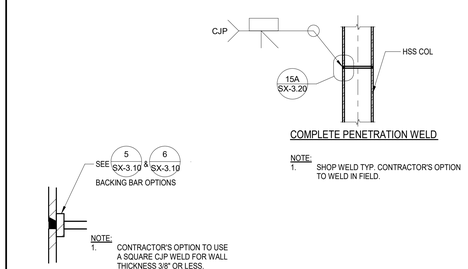

NOTE:
1. SHOP WELD TYP. CONTRACTOR'S OPTION TO WELD IN FIELD.

NOTE:
1. CONTRACTOR'S OPTION TO USE A SQUARE CJP WELD FOR WALL THICKNESS 3/8" OR LESS.

15A DETAIL
6" = 1'-0"

GRAVITY COLUMN CJP SPLICE

SCALE: 1 1/2" = 1'-0" | 15

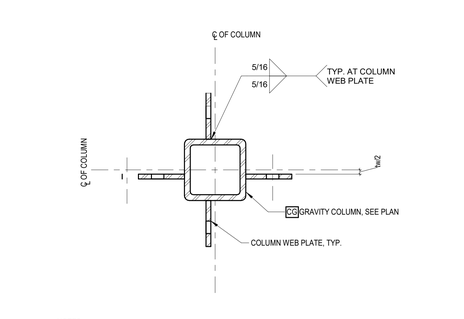

NOTES:
1) BEAMS NOT SHOWN FOR CLARITY
2) 4 BEAM TO COLUMN CONNECTION SHOWN. SEE PLANS FOR ACTUAL NUMBER OF CONNECTIONS

SECTION W8 AND W10 BEAM TO GRAVITY COLUMN

SCALE: 3" = 1'-0" | 11

NOTE:
FOR COLUMN WEB PLATE DIMENSIONS AND BOLT SCHEDULE SEE DETAIL 3/SX-4.20

GRAVITY COLUMN WEB PLATE (CWP)

SCALE: 3" = 1'-0" | 7

BEAM TO COLUMN CONNECTION BOLT SCHEDULE

SCALE: NTS | 3

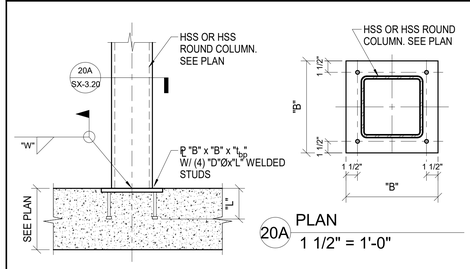

20A PLAN
1 1/2" = 1'-0"

COL. PROFILE	EMBED PLATE THICKNESS "tbp" (in)	EMBED PLATE WIDTH "B" (in)	STUD Ø "D" (in)	STUD LEN "L" (in)	WELD "W" (in)

GRAVITY COLUMN BASE CONNECTION

SCALE: 1" = 1'-0" | 20

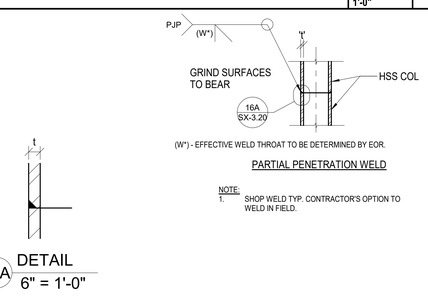

NOTE:
1. SHOP WELD TYP. CONTRACTOR'S OPTION TO WELD IN FIELD.

16A DETAIL
6" = 1'-0"

GRAVITY COLUMN PJP SPLICE

SCALE: 1 1/2" = 1'-0" | 16

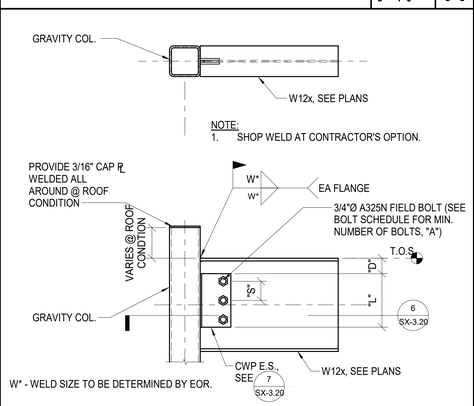

NOTE:
1. SHOP WELD AT CONTRACTOR'S OPTION.

W* - WELD SIZE TO BE DETERMINED BY EOR.

CANTILEVERED BEAM AT GRAVITY COLUMN DETAIL

SCALE: 1 1/2" = 1'-0" | 12

CONXTECH
Simply Faster

CA Contractor's License No. 865625
6600 Koll Center Parkway
Suite 210
Pleasanton, CA 94566

T 510.264.9111
F 510.264.1181
www.ConXtech.com

PROFESSIONAL SEAL:

REVISIONS:

NO.	DATE:	DESCRIPTION:
1	05/14/2020	SDR 033
2	07/22/2024	SDR 0054

PROJECT ADDRESS:

PLAN SET STATUS:

TITLE: XR200™ GRAVITY COLUMN DETAILS

ISSUE DATE: 07/22/2024

PROJECT NO.:

SCALE: As indicated

SHEET NO.
SX-3.20

PRINTED ON:
9/4/2024 1:13:24 PM

R:\ConXCAD\1.0 ConXR200\Drawings\1.3 Revit\1.1.3.1 Current\2024\07.22_Rev2_SDR-0054\XR200_Rev2.rvt

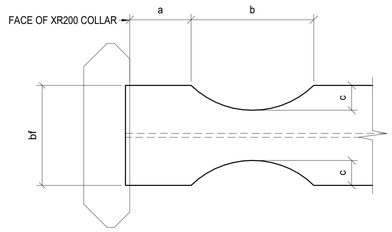

RBS DIMENSION SCHEDULE			
BEAM	a (in)	b (in)	c (in)

REDUCED BEAM SECTION DIMENSIONS

SCALE: 3" = 1'-0"

10

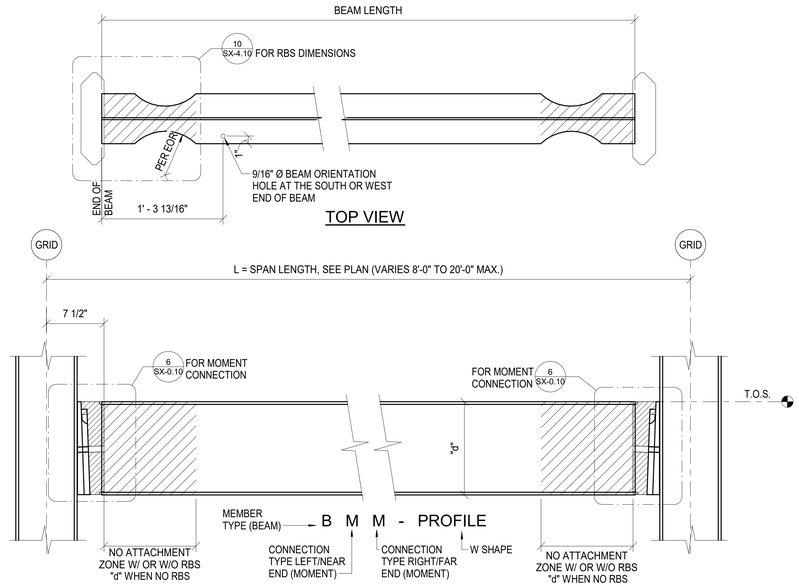

MOMENT FRAME BEAM ELEVATION

SCALE: 1 1/2" = 1'-0"

2

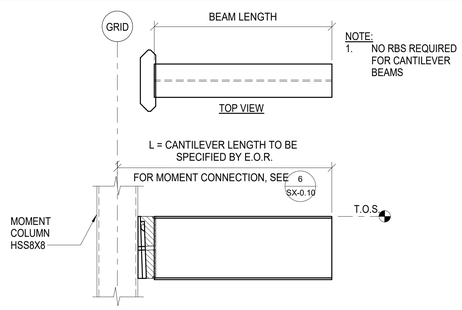

NOTE:
1. NO RBS REQUIRED FOR CANTILEVER BEAMS

CANTILEVERED BEAM DETAIL AT COLLAR

SCALE: 1" = 1'-0"

12

CONXTECH®
Simply Faster

CA Contractor's License No. 855525
6600 Koll Center Parkway
Suite 210
Pleasanton, CA 94566

T 510.264.9111
F 510.264.1181
www.Conxtech.com

PROFESSIONAL SEAL:

REVISIONS:

NO.	DATE:	DESCRIPTION:
1	05/14/2020	SDR 033.
2	07/22/2024	SDR 0054

PROJECT ADDRESS:

PLAN SET STATUS:

TITLE: **XR200™ MOMENT BEAM DETAILS**

ISSUE DATE: 07/22/2024

PROJECT NO.:

SCALE: As indicated

SHEET NO.

SX-4.10

PRINTED ON:
9/4/2024 1:13:25 PM

R:\ConXCAD\1.0 ConXXR200 Drawings\1.3 Revit\1.1.3.1 Current\2024.07.22_Rev2_SDR-0054\XR200_Rev2.rvt

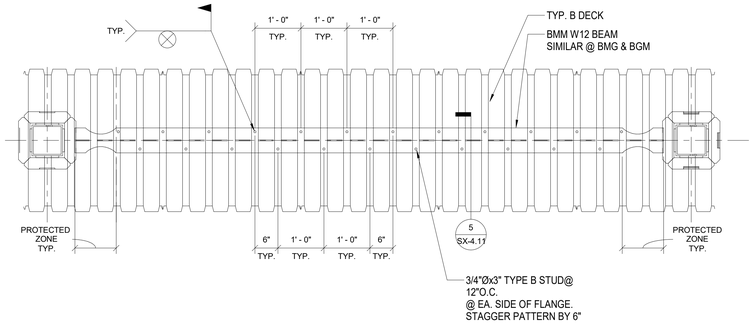

TORSIONAL BRACING - DECK PERPENDICULAR TO MOMENT BEAM- PLAN VIEW | SCALE: 3/4" = 1'-0" | 13

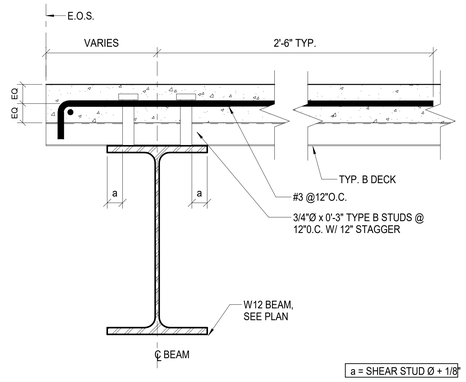

DECK PERPENDICULAR TO MOMENT BEAM NEAR E.O.S. | SCALE: 3" = 1'-0" | 9

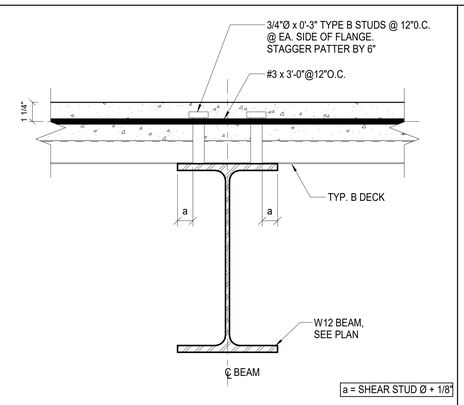

DECK PERPENDICULAR TO MOMENT BEAM | SCALE: 3" = 1'-0" | 5

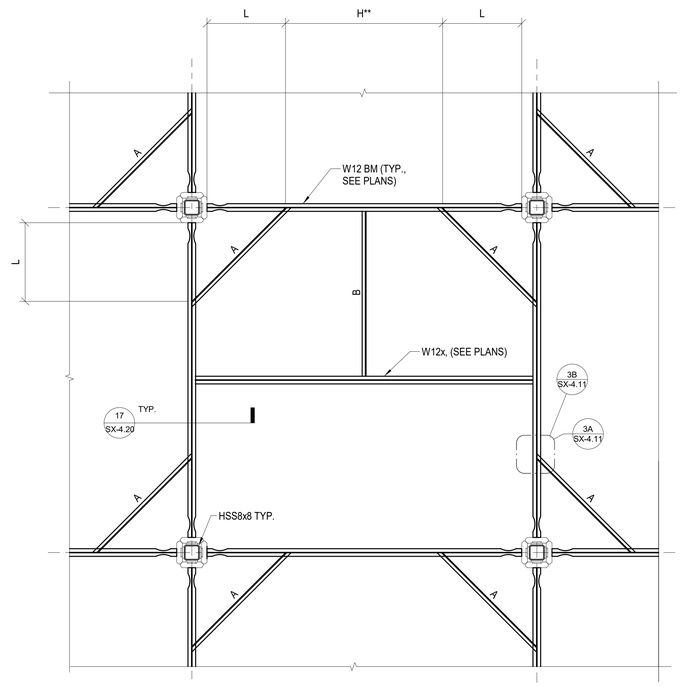

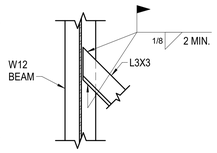

3A DETAIL - WELDED OPTION
1 1/2" = 1'-0"

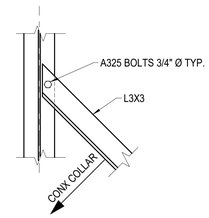

3B DETAIL - BOLTED OPTION
1 1/2" = 1'-0"

	L	A	B*
W12x19 W12X22	41"	L3X3X1/4	L3X3X1/4
W12X26 W12x30	75"	L3X3X1/4	L3X3X1/4

* BRACE TYPE B REQ'D WHEN H > L
** Hmax = 2L, IF H > 2L, ANOTHER TYPE B BRACE IS REQ'D.

LATERAL BRACING - TYPE 1 | SCALE: NTS | 3

CONXTECH
Simply Faster
CA Contractor's License No 855525
6600 Koll Center Parkway
Suite 210
Pleasanton, CA 94566
T 510.264.9111
F 510.264.1181
www.ConXtech.com

PROFESSIONAL SEAL:

REVISIONS:

NO.	DATE:	DESCRIPTION:
1	05/14/2020	SDR 033.
2	07/22/2024	SDR 0054

PROJECT ADDRESS:

PLAN SET STATUS:

TITLE:

XR200™ STABILITY BRACING DETAILS

ISSUE DATE: 07/22/2024

PROJECT NO.:

SCALE: As indicated

SHEET NO.

SX-4.11

PRINTED ON:
9/4/2024 1:13:26 PM

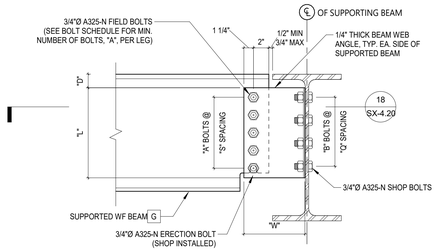

NOTES

1. FOR BEAM WEB ANGLE DIMENSIONS AND BOLT SCHEDULE SEE 1/SX-4.20 AND 3/SX-4.20
2. FOR GRAVITY BEAM COPE DIMENSIONS SEE DETAIL 6/SX-4.20

BEAM TO BEAM GRAVITY CONNECTION

SCALE: 1 1/2" = 1'-0" | 17

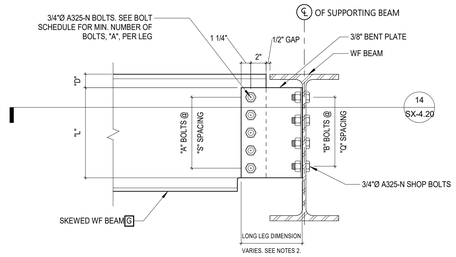

NOTES

1. FOR BEAM WEB ANGLE DIMENSIONS AND BOLT SCHEDULE SEE 1/SX-4.20 AND 3/SX-4.20
2. FOR SKEWED GRAVITY BEAMS, THE "LONG LEG" DIMENSION SHOULD BE CALCULATED USING THE SKEW ANGLE AND THE DIMENSIONS SHOWN ON 14/SX-4.20
3. FOR SKEWED GRAVITY BEAM COPE DIMENSIONS SEE DETAIL 7/SX-4.20

SKEWED GRAVITY BEAM CONNECTION

SCALE: 1 1/2" = 1'-0" | 13

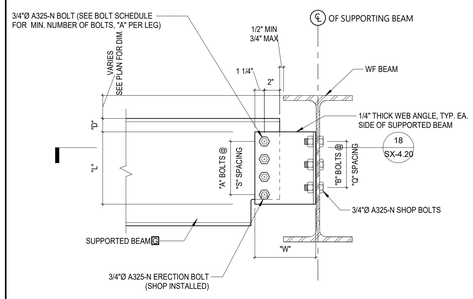

NOTES

1. FOR NOTES NOT SHOWN SEE 17/SX-4.20

DROPPED BEAM TO BEAM GRAVITY CONNECTION

SCALE: 1 1/2" = 1'-0" | 5

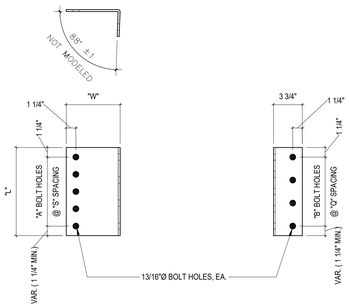

NOTES

1. FOR BEAM WEB ANGLE DIMENSIONS AND BOLT SCHEDULE SEE DETAILS 2/SX-4.20 & 3/SX-4.20

BEAM WEB ANGLE (BWA)

SCALE: 1 1/2" = 1'-0" | 1

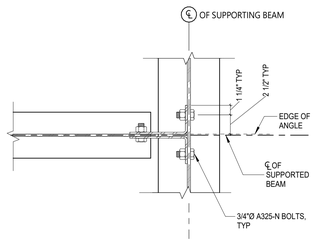

SECTION BEAM TO BEAM GRAVITY CONNECTION

SCALE: 1 1/2" = 1'-0" | 18

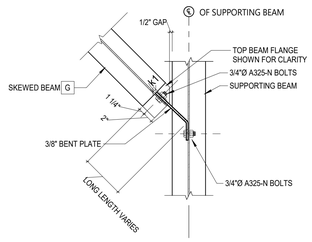

SECTION SKEWED GRAVITY BEAM CONNECTION

SCALE: 1" = 1'-0" | 14

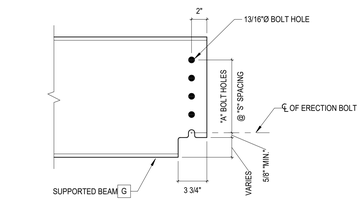

NOTES

1. FOR BOLT SCHEDULE SEE TABLE 3/SX-4.20

GRAVITY BEAM COPED BOTTOM FLANGE

SCALE: 1 1/2" = 1'-0" | 6

BEAM WEB ANGLE (BWA) LONG LEG LENGTH	
FLANGE WIDTH bf OF SUPPORTING BEAM	"W" (IN)
4	5 5/8
5 - 5 1/4	6 1/4
5 1/2 - 6	6 9/16
6 1/2	6 7/8
6 3/4 - 7 1/8	7 1/8
7 1/2 - 7 5/8	7 5/16
8 - 8 3/8	7 11/16
9 - 9 1/8	8 1/16
10 - 10 1/8	8 9/16
10 1/4 - 10 1/2	8 3/4
11 - 11 3/8	9 1/16
11 1/2 - 11 7/8	9 5/16
12 - 12 3/8	9 5/8
12 1/2 - 12 5/8	9 3/4
12 3/4 - 13	9 7/8
14 - 14 3/8	10 9/16
14 1/2 - 15 1/8	10 15/16
15 1/2 - 15 3/4	11 3/16

NOTES

1. AT SKEWED BEAMS, THE "W" DIMENSION OF THE BEAM WEB ANGLE SHOULD BE CALCULATED USING THE SKEW ANGLE AND THE DIMENSIONS NOTED ON DETAILS 1/SX-4.20 & 13/SX-4.20
2. IN CASES WHERE THE OTHER END OF A GRAVITY BEAM IS A MOMENT CONNECTION (BMG, BGM, BCM & BMC) ALL BOLTS USED IN THE GRAVITY CONNECTION SHALL BE DESIGNATED A325-SC

BEAM WEB ANGLE DIMENSION SCHEDULE

SCALE: 1 1/2" = 1'-0" | 2

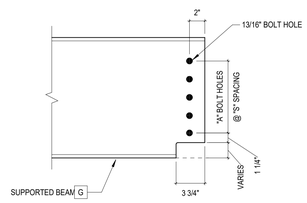

NOTES

1. FOR BOLT SCHEDULE SEE TABLE 3/SX-4.20

SKEWED BEAM COPED BOTTOM FLANGE

SCALE: 1 1/2" = 1'-0" | 7

BEAM WEB ANGLE (BWA) DIMENSIONS						
		AT SUPPORTED BEAM (LONG LEG OF BWA)		AT SUPPORTING BEAM (SHORT LEG OF BWA)		
INCOMING BEAM	"L" CLIP LENGTH (IN)	"A" NUMBER OF BOLTS	"S" BOLT SPACING (IN)	"B" NUMBER OF BOLTS	"Q" BOLT SPACING (IN)	"D" T.O.S. TO EDGE OF CLIP (IN)
W12	8 1/2	3	2 5/16	3	3	1 3/4
W14	9 7/16 (TYP.) 11 1/2 (NOTE 4)	4	2 5/16	3	3	1 3/4
W16	11 3/4	5	2 5/16	4	3	1 3/4

NOTES:

1. FOR W8 AND W10 INCOMING BEAMS, USE DETAIL 1/SX-4.21, 5/SX-4.21, OR 12/SX-4.21.
2. IN CONDITIONS WHERE k REGION OF SUPPORTING BEAM IS ENCROACHED BY THE ANGLES, ADJUST "D" VALUE SO ANGLES ARE CLEAR OF THIS REGION
3. IN CONDITIONS WHERE A DEEPER BEAM IS FRAMING INTO A SHALLOWER BEAM, USE THE SMALLER NUMBER OF BOLTS FOR BOTH LEGS OF THE BWA.
4. IN CASES WHERE THE SUPPORTING BM HAS A W14 BM ON ONE SIDE AND A W16 OR DEEPER BM ON THE OPPOSITE SIDE AT THE SAME LOCATION (I.E. THEIR CONNECTING ELEMENTS SHARE BOLT HOLES AT THE SUPPORTING BM WEB), USE L = 11 1/2 FOR THE W14 BM CLIP LENGTH.

BEAM TO BEAM CONNECTION BOLT SCHEDULE

SCALE: 1 1/2" = 1'-0" | 3

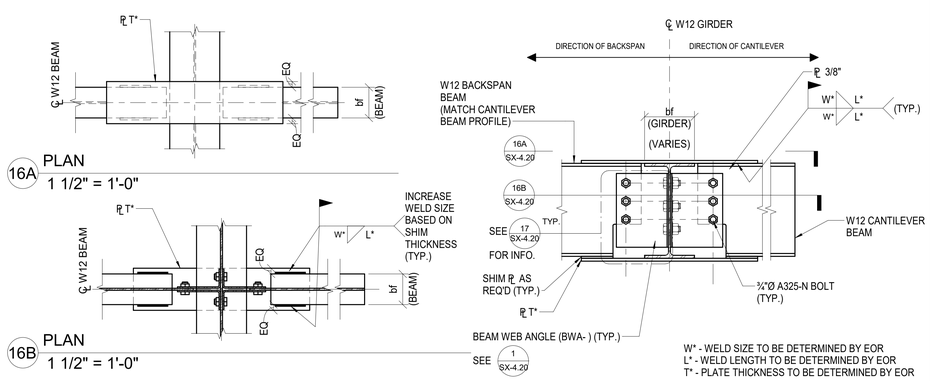

W12 TO W12 FIELD WELDED THROUGH-BEAM CANTILEVER CONNECTION

SCALE: 1 1/2" = 1'-0" | 16

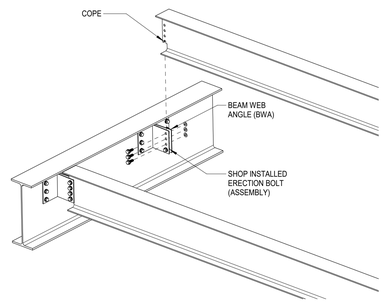

BEAM TO GRAVITY BEAM ASSEMBLY DIAGRAM

SCALE: 1 1/2" = 1'-0" | 4

CONXTECH
Simply Faster
CA Contractor's License No. 866525
6600 Koll Center Parkway
Suite 210
Pleasanton, CA 94566
T 510.264.9111
F 510.264.1181
www.ConXtech.com

PROFESSIONAL SEAL:

REVISIONS:

NO.	DATE:	DESCRIPTION:
1	05/14/2020	SDR 033
2	07/22/2024	SDR 0054

PROJECT ADDRESS:

PLAN SET STATUS:

TITLE: XR200™ DROP-IN GRAVITY BEAM DETAILS

ISSUE DATE: 07/22/2024

PROJECT NO.:

SCALE: As indicated

SHEET NO. SX-4.20

PRINTED ON: 9/4/2024 1:13:28 PM

R:\ConXCAD\1.0 ConXR200\Drawings\1.3 Rev#\1.1.3.1 Current\2024\07.22_Rev2_SDR-0054\XR200_Rev2.rvt

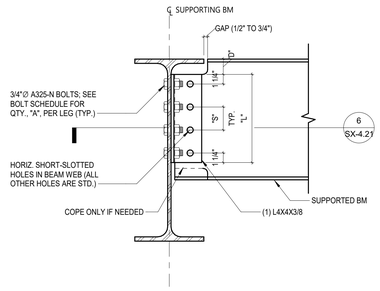

BEAM TO BEAM GRAVITY CONNECTION - SINGLE ANGLE

SCALE: 1 1/2" = 1'-0"

5

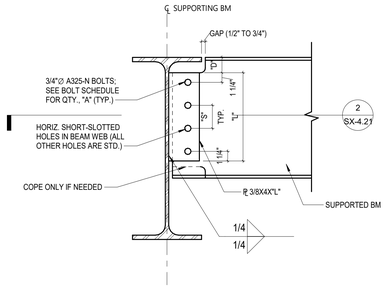

BEAM TO BEAM GRAVITY CONNECTION - SHEAR TAB

SCALE: 1 1/2" = 1'-0"

1

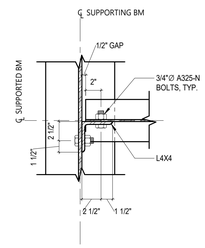

SECTION - BEAM TO BEAM GRAVITY CONNECTION - SINGLE ANGLE

SCALE: 1 1/2" = 1'-0"

6

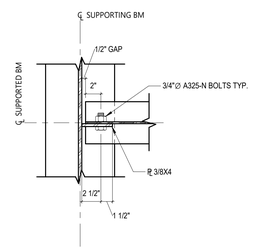

SECTION - BEAM TO BEAM GRAVITY CONNECTION - SHEAR TAB

SCALE: 1 1/2" = 1'-0"

2

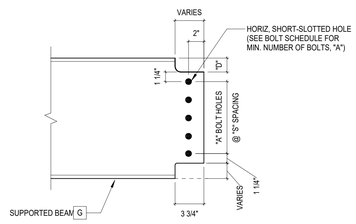

NOTES

1. FOR BOLT SCHEDULE SEE TABLE 3/SX-4.21

SKEWED BEAM FLANGE COPES

SCALE: 1 1/2" = 1'-0"

7

BEAM WEB ANGLE (BWA) AND BEAM WEB PLATE (BWP) DIMENSIONS

INCOMING BEAM	"L" CLIP LENGTH (IN)	"A" NUMBER OF BOLTS	"S" BOLT SPACING (IN)	"D" T.O.S. TO EDGE OF CLIP (IN)
W8	5 1/2	2	3	1 3/4 (TYP.), 1 1/4 (NOTE 1)
W10	5 1/2	2	3	1 3/4 (TYP.), 1 1/4 (NOTE 1)
W12	8 1/2	3	3	1 3/4
W14	8 1/2	3	3	1 3/4
W16	11 1/2	4	3	1 3/4

NOTES:

1. FOR W8-ON-W8 AND W10-ON-W8 CONNECTIONS, USE D = 1 1/4", OTHERWISE, USE D = 1 3/4". FOR W8 AND W10 INCOMING BEAMS IN A BEAM TO XR200 COLLAR GRAVITY CONNECTION USE DETAIL 14/SX-4.22.
2. IN CONDITIONS WHERE k REGION OF SUPPORTING BEAM IS ENCROACHED BY THE PLATES OR ANGLES, ADJUST "D" VALUE SO PLATES AND ANGLES ARE CLEAR OF THIS REGION
3. IN CONDITIONS WHERE A DEEPER BEAM IS FRAMING INTO A SHALLOWER BEAM, USE THE SMALLER NUMBER OF BOLTS FOR BOTH LEGS OF THE BWA OR BWP.

BEAM TO BEAM CONNECTION BOLT SCHEDULE

SCALE: 1 1/2" = 1'-0"

3

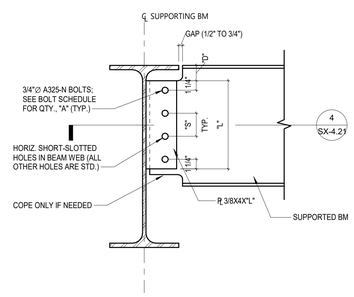

SKEWED GRAVITY BEAM CONNECTION

SCALE: 1 1/2" = 1'-0"

12

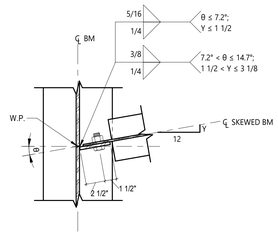

FOR θ ≤ 14.7° FROM THE PERPENDICULAR

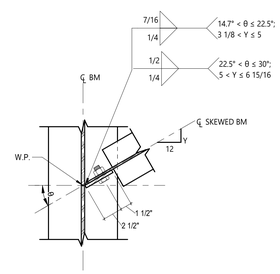

FOR 14.7° < θ ≤ 30° FROM THE PERPENDICULAR

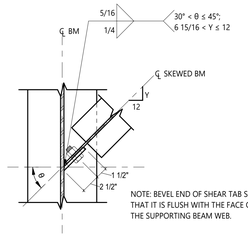

NOTE: BEVEL END OF SHEAR TAB SO THAT IT IS FLUSH WITH THE FACE OF THE SUPPORTING BEAM WEB.

FOR 30° < θ ≤ 45° FROM THE PERPENDICULAR

SECTION - SKEWED GRAVITY BEAM CONNECTION

SCALE: 1 1/2" = 1'-0"

4

CONXTECH
Simply Faster

CA Contractor's License No. 866525
6600 Koll Center Parkway
Suite 210
Pleasanton, CA 94566

T 510.264.9111
F 510.264.1181
www.ConXtech.com

PROFESSIONAL SEAL:

REVISIONS:

NO.	DATE:	DESCRIPTION:
1	05/14/2020	SDR 033
2	07/22/2024	SDR 0054

PROJECT ADDRESS:

PLAN SET STATUS:

TITLE: XR200™ CONVENTIONAL GRAVITY BEAM DETAILS

ISSUE DATE: 07/22/2024

PROJECT NO.:

SCALE: 1 1/2" = 1'-0"

SHEET NO.

SX-4.21

PRINTED ON: 9/4/2024 1:13:30 PM

R:\ConXCAD\1.0 ConXR200 Drawings\1.3 Revit\1.1.3.1 Current\2024\07.22_Rev2_SDR-0054\XR200_Rev2.rvt

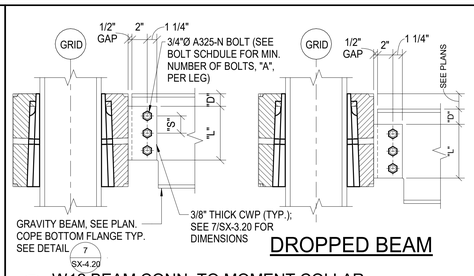

DROPPED BEAM

14A W12 BEAM CONN. TO MOMENT COLLAR

1 1/2" = 1'-0"

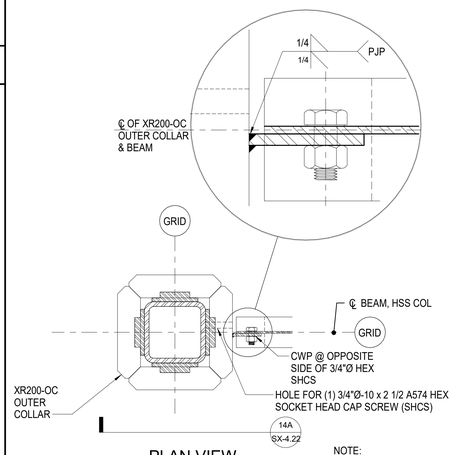

PLAN VIEW

NOTE:
TOP FLANGE NOT SHOWN FOR CLARITY

SHEAR PLATE CONNECTION TO MOMENT COLUMN SCALE: 1 1/2" = 1'-0" **14**

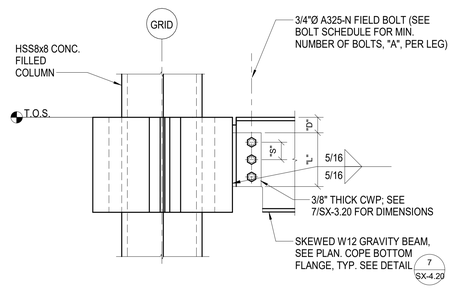

SECTION SCALE: 1 1/2" = 1'-0" **10**

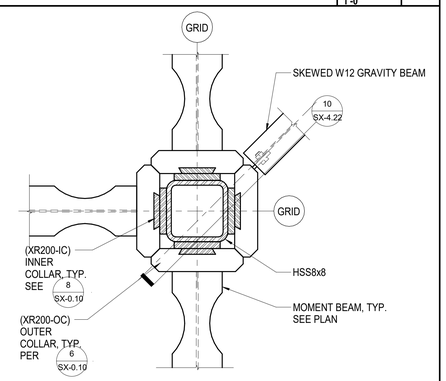

PLAN VIEW

SKEWED GRAVITY BEAM CONNECION TO MOMENT COLUMN SCALE: 1 1/2" = 1'-0" **11**

CONXTECH®
Simply Faster

CA Contractor's License No. 855525
6600 Koll Center Parkway
Suite 210
Pleasanton, CA 94566

T 510.264.9111
F 510.264.1181
www.Conxtech.com

PROFESSIONAL SEAL:

REVISIONS:

NO.	DATE:	DESCRIPTION:
1	05/14/2020	SDR 033.
2	07/22/2024	SDR 0054

PROJECT ADDRESS:

PLAN SET STATUS:

TITLE: **XR200™ COLLAR CONNECTION DETAILS**

ISSUE DATE: 07/22/2024

PROJECT NO.:

SCALE: As indicated

SHEET NO.

SX-4.22

PRINTED ON:
9/4/2024 1:13:31 PM

R:\ConXCAD\1.0 ConXXR200 Drawings\1.3 Revit\1.1.3.1 Current\2024.07.22_Rev2_SDR-0054\XR200_Rev2.rvt

ROUND WEB OPENING SCHEDULE FOR W12 BEAMS						
DETAIL 4B: DISTANCE BETWEEN CENTERLINES OF ADJACENT OPENINGS						
D_2(IN.) / D_1(IN.)	2	3	4	5	6	7
2	5	6.25	7.5	8.75	10	11.25
3	6.25	7.5	8.75	10	11.25	12.5
4	7.5	8.75	10	11.25	12.5	13.75
5	8.75	10	11.25	12.5	13.75	15
6	10	11.25	12.5	13.75	15	16.25
7	11.25	12.5	13.75	15	16.25	17.5

BASED ON FORMULA:

[(D1+D2)/2] x1.5 + 0.5 x D1 + 0.5 x D2

D = DIAMETER

d = BEAM DEPTH

DETAIL 4C: DISTANCE BETWEEN CENTERLINE OF GRAVITY COLUMN / BEAM TO CENTERLINE OF OPENING	
HOLE Ø D (IN.)	DIST. = 18+D/2 (IN.)
2	19
3	19.5
4	20
5	20.5
6	21
7	21.5

DETAIL 4D: DISTANCE BETWEEN CENTERLINE OF MOMENT COLUMN TO CENTERLINE OF OPENING	
HOLE Ø D (IN.)	DIST. = 24+D/2 (IN.) D ≤ d/4 28+D/2 (IN.) D > d/4
2	25
3	25.5
4	30
5	30.5
6	31
7	31.5

DETAIL 4E: DISTANCE BETWEEN CENTERLINE OF MOMENT COLUMN W/ SHEAR PLATE TO CENTERLINE OF OPENING	
HOLE Ø D (IN.)	DIST. = 22+D/2 (IN.)
2	23
3	23.5
4	24
5	24.5
6	25
7	25.5

NOTES:

1. ALL OPENINGS MUST BE APPROVED BY THE ARCHITECT AND ENGINEER OF RECORD.
2. THE LIMITATIONS FOR OPENINGS DO NOT APPLY TO BOLT HOLES.
3. RECTANGULAR OPENINGS ARE NOT PERMITTED UNLESS EVALUATED AND APPROVED BY THE ENGINEER OF RECORD.
4. THE SUM OF THE DIAMETERS OF OPENINGS GREATER THAN 3" SHALL NOT EXCEED 21" IN ANY 48" SEGMENT OF THE BEAM.
5. THE SUM OF THE DIAMETERS OF OPENINGS GREATER THAN 3" SHALL NOT EXCEED 48" FOR THE FULL LENGTH OF ANY MOMENT BEAM.
6. NO MORE THAN 4 OPENINGS 6" OR GREATER IN DEPTH SHALL BE PERMITTED IN ANY MOMENT BEAM.
7. FOR BEAMS THAT ARE PART OF THE SEISMIC FORCE RESISTING SYSTEM (SFRS) AND ARE DESIGNED IN ACCORDANCE WITH AISC 341 (SEISMIC PROVISIONS FOR STRUCTURAL STEEL BUILDINGS), THE FOLLOWING ADDITIONAL RESTRICTIONS SHALL APPLY. ALL BEAMS ARE ASSUMED TO HAVE AN RBS UNLESS NOTED OTHERWISE.
   A. FOR BMM W12X26 AND W12X30 LESS THAN 10'-0" IN LENGTH (FROM CENTERLINES OF COLUMNS), OPENINGS SHALL BE VALIDATED AND APPROVED BY THE ENGINEER OF RECORD.
   B. FOR BMG W12X26 AND W12X30 LESS THAN 5'-6" IN LENGTH (FROM CENTERLINES OF SUPORTS), OPENINGS SHALL BE VALIDATED AND APPROVED BY THE ENGINEER OF RECORD.
   C. FOR BMG W12X19 AND W12X22 LESS THAN 4'-6" IN LENGTH (FROM CENTERLINES OF SUPPORTS), OPENINGS SHALL BE VALIDATED AND APPROVED BY THE ENGINEER OF RECORD.
   D. FOR ALL BMM AND BMG BEAMS WITHOUT AN RBS (EXCEPT W12X19), OPENINGS SHALL BE VALIDATED AND APPROVED BY THE ENGINEER OF RECORD. FOR BMM W12X19 WITHOUT AN RBS LESS THAN 9'-0" IN LENGTH (FROM CENTERLINES OF SUPPORTS) OR BMG W12X19 WITHOUT AN RBS LESS THAN 5'-0" IN LENGTH (FROM CENTERLINES OF SUPPORTS), OPENINGS SHALL BE VALIDATED AND APPROVED BY THE ENGINEER OF RECORD.
8. FOR ALL BGG BEAMS SUPPORTING HEAVY LOADS (E.G., GREEN ROOFS, ROOFTOP ASSEMBLY AREAS, PLANTERS, MECHANICAL UNITS), OPENINGS SHALL BE VALIDATED AND APPROVED BY THE ENGINEER OF RECORD.
9. FOR ALL BEAMS OTHER THAN W12 BEAMS, OPENINGS SHALL BE VALIDATED AND APPROVED BY THE ENGINEER OF RECORD.
10. FOR BMM BEAMS THAT ARE PART OF THE SFRS BUT ARE NOT DESIGNED IN ACCORDANCE WITH AISC 341, OPENING LOCATIONS ADJACENT TO THE COLLAR SHALL STILL BE IN ACCORDANCE WITH DETAIL 4D UNLESS OTHERWISE VALIDATED AND APPROVED BY THE ENGINEER OF RECORD.

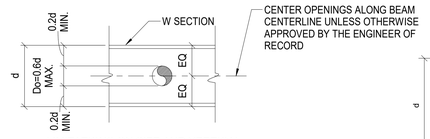

4A LIMITATIONS ON SIZE AND VERTICAL POSITION OF OPENINGS
1" = 1'-0"

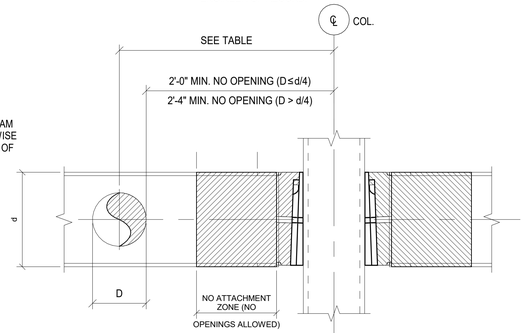

4D DISTANCE BTWN CENTERLINE OF MOMENT COLUMN TO CENTERLINE OF OPENING
1 1/2" = 1'-0"

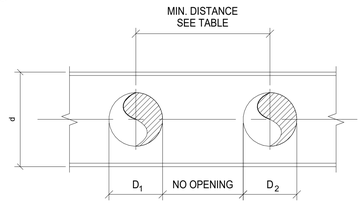

4B DISTANCE BTWN CENTERLINES OF ADJACENT OPENINGS
1 1/2" = 1'-0"

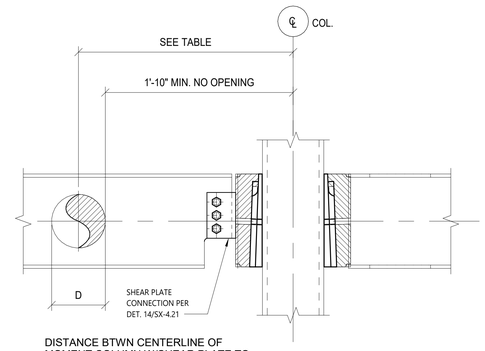

4E DISTANCE BTWN CENTERLINE OF MOMENT COLUMN W/SHEAR PLATE TO CENTERLINE OF OPENING
1 1/2" = 1'-0"

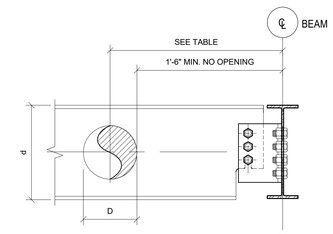

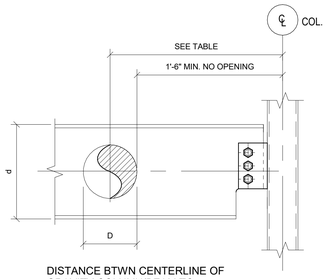

4C DISTANCE BTWN CENTERLINE OF GRAVITY COLUMN/BEAM TO CENTERLINE OF OPENING
1 1/2" = 1'-0"

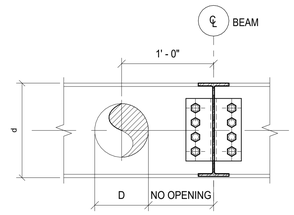

4F DISTANCE BTWN CENTERLINE OF BEAM TO CENTERLINE OF OPENING
1 1/2" = 1'-0"

ROUND OPENINGS FOR W12 BEAMS

SCALE: 1 1/2" = 1'-0"

4

CONXTECH®
Simply Faster
CA Contractor's License No. 855525
6600 Koll Center Parkway
Suite 210
Pleasanton, CA 94566
T 510.264.9111
F 510.264.1181
www.ConXtech.com

PROFESSIONAL SEAL:

REVISIONS:

NO:	DATE:	DESCRIPTION:
1	05/14/2020	SDR 033

PROJECT ADDRESS:

PLAN SET STATUS:

TITLE: XR200™ BEAM ROUND WEB OPENING DETAILS

ISSUE DATE: 07/22/2024

PROJECT NO.:

SCALE: As indicated

SHEET NO.

SX-4.30

PRINTED ON: 9/4/2024 1:13:33 PM

R:\ConXCAD\1.0 ConXR200\Drawings\1.3 Revit\1.1.3.1 Current\2024.07.22_Rev2_SDR-0054\XR200_Rev2.rvt

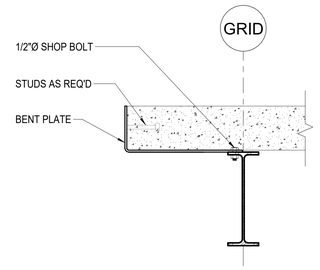

BENT PLATE POURSTOP — SCALE: 1 1/2" = 1'-0" — **1**

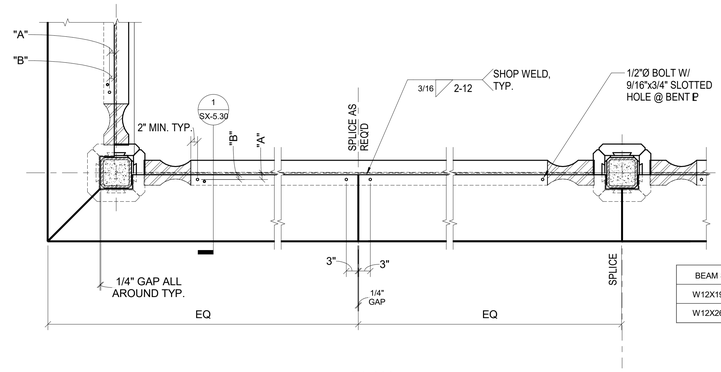

BEAM SECTION	"A"	"B"
W12X19, W12X22	1 1/8"	1"
W12X26, W12X30	1 3/4"	1 1/4"

PLAN

BENT PLATE BETWEEN MOMENT COLUMNS — SCALE: 3/4" = 1'-0" — **2**

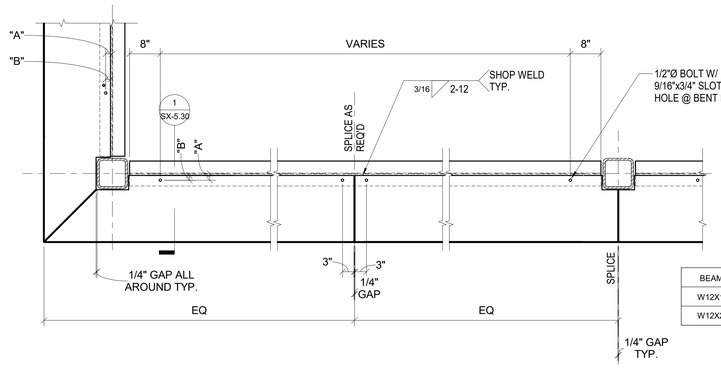

BEAM SECTION	"A"	"B"
W12X19, W12X22	1 1/8"	1"
W12X26, W12X30	1 3/4"	1 1/4"

PLAN

BENT PLATE BETWEEN GRAVITY COLUMNS — SCALE: 3/4" = 1'-0" — **3**

CONXTECH
Simply Faster
CA Contractor's License No 855525
6600 Koll Center Parkway
Suite 210
Pleasanton, CA 94566
T 510.264.9111
F 510.264.1181
www.ConXtech.com

PROFESSIONAL SEAL:

REVISIONS:

NO.	DATE:	DESCRIPTION:
2	07/22/2024	SDR 0054

PROJECT ADDRESS:

PLAN SET STATUS:

TITLE: **XR200™ BENT PLATE DETAILS**

ISSUE DATE: 07/22/2024

PROJECT NO.:

SCALE: As indicated

SHEET NO.

SX-5.30

PRINTED ON: 9/4/2024 1:13:34 PM

ROOF SCREEN NOTES:

1. WEEP HOLES FOR GALVANIZED PARTS TO BE PER STEEL FABRICATOR OPTION.
2. LONG SLOTTED HOLE DIMENSIONS SHALL BE (d + 1/16") X (2.5 X d) WHERE d IS THE BOLT DIAMETER.

ROOF SCREEN NOTES — SCALE: 1 1/2" = 1'-0" — 17

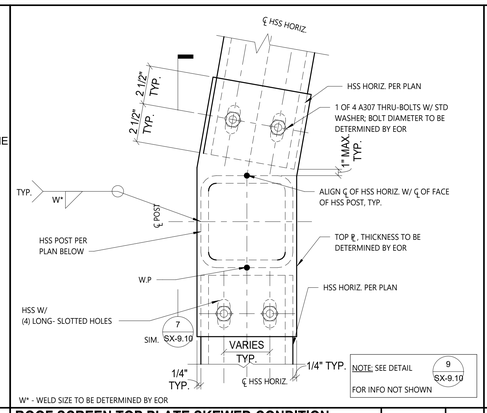

ROOF SCREEN TOP PLATE SKEWED CONDITION - PLAN DETAIL — SCALE: 3" = 1'-0" — 13

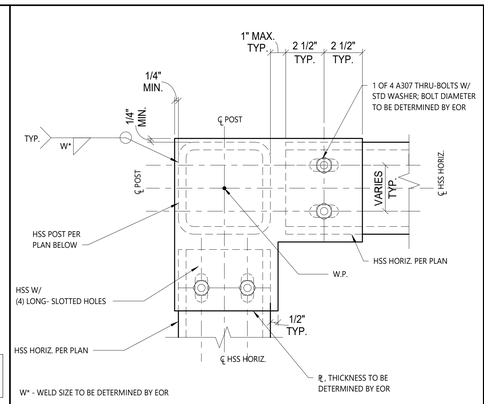

ROOF SCREEN TOP PLATE CORNER CONDITION - PLAN DETAIL — SCALE: 3" = 1'-0" — 9

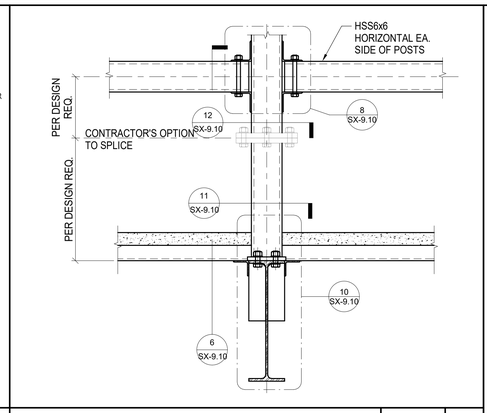

ROOF SCREEN - SECTION — SCALE: 1" = 1'-0" — 5

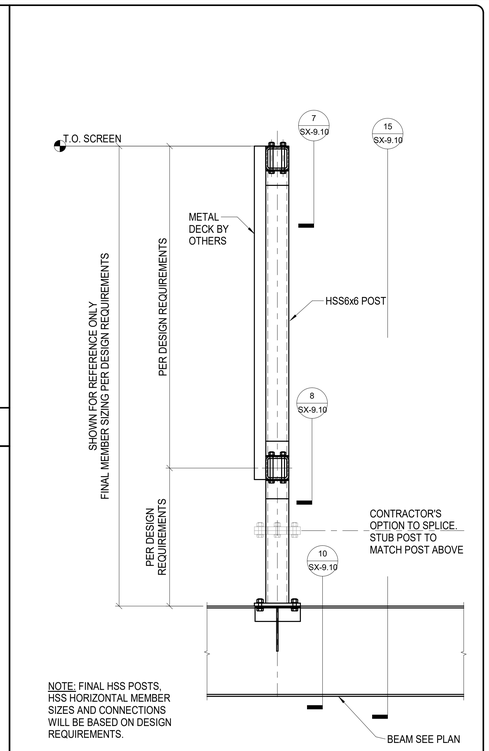

ROOF SCREEN-BASE DESIGN — SCALE: 3/4" = 1'-0" — 2

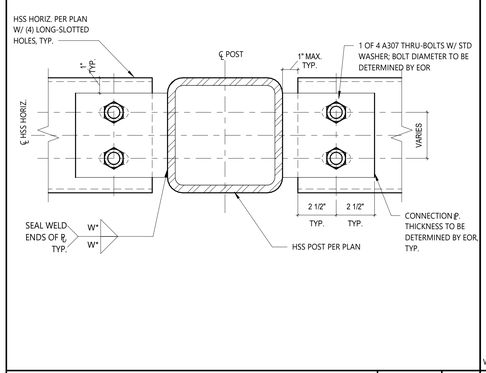

HSS CONNECTION TO POST DETAIL - PLAN — SCALE: 3" = 1'-0" — 18

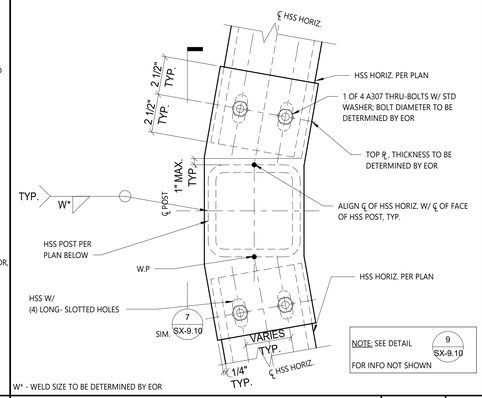

ROOF SCREEN TOP PLATE SKEWED CONDITION - PLAN DETAIL — SCALE: 3" = 1'-0" — 14

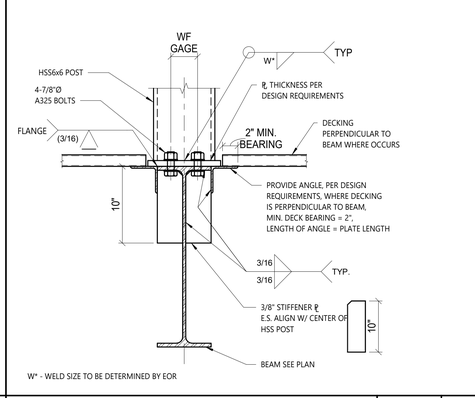

ROOF SCREEN POST - W BEAM CONNECTION — SCALE: 1 1/2" = 1'-0" — 10

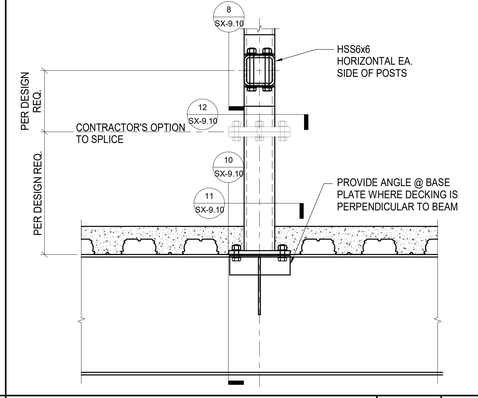

ROOF SCREEN - SECTION — SCALE: 1" = 1'-0" — 6

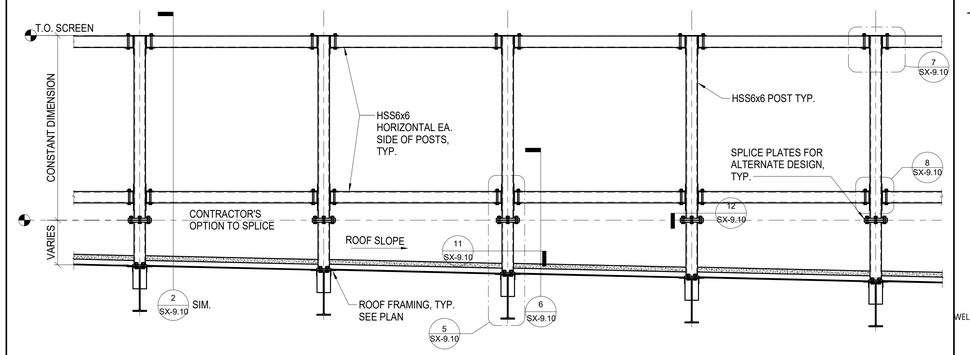

ROOF SCREEN-PARTIAL ELEVATION — SCALE: 3/8" = 1'-0" — 15

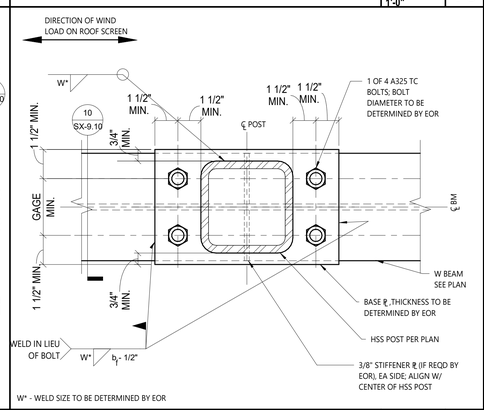

ROOF SCREEN BASE PLATE DETAIL — SCALE: 3" = 1'-0" — 11

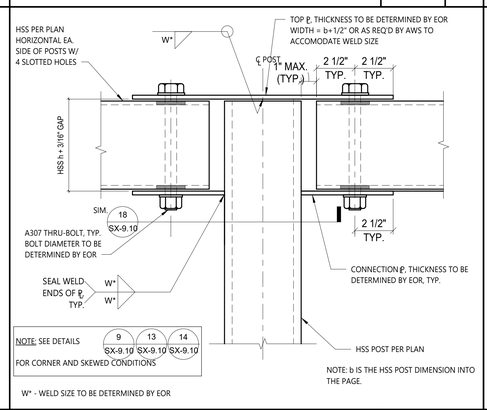

TOP OF ROOF SCREEN DETAIL — SCALE: 3" = 1'-0" — 7

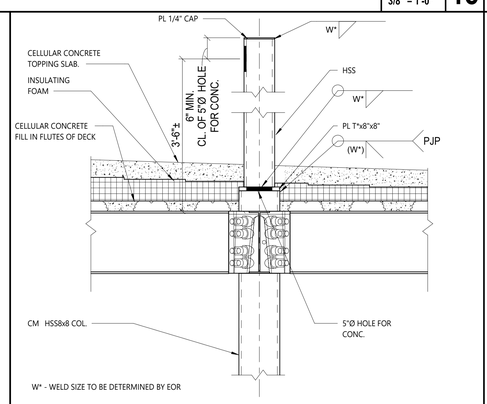

POST CONNECTION TO CON200 MOMENT COLUMN AT ROOF — SCALE: 1" = 1'-0" — 16

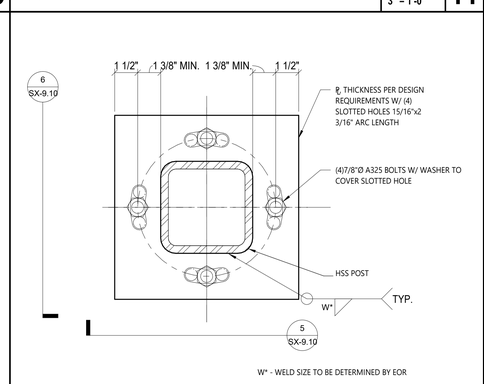

ROOF SCREEN HSS POST SPLICE PLATE PLAN DETAIL — SCALE: 3" = 1'-0" — 12

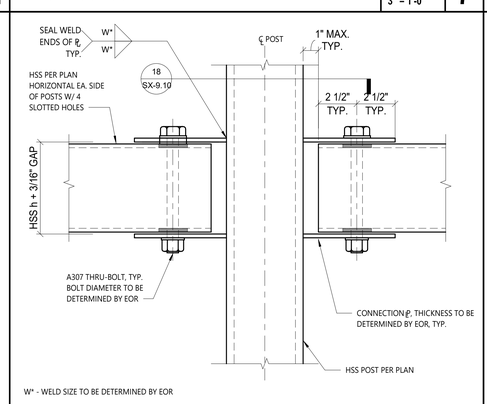

ROOF SCREEN DETAIL - HSS HORIZONTAL CONN. TO POST — SCALE: 3" = 1'-0" — 8

CONXTECH® Simply Faster
CA Contractor's License No. 855525
6600 Koll Center Parkway
Suite 210
Pleasanton, CA 94566
T 510.264.9111
F 510.264.1181
www.ConXtech.com

PROFESSIONAL SEAL:

REVISIONS:

NO.	DATE:	DESCRIPTION:
2	07/22/2024	SDR 0054

PROJECT ADDRESS:

PLAN SET STATUS:

TITLE: **ROOF SCREEN ELEVATIONS & DETAILS**

ISSUE DATE: 07/22/2024

PROJECT NO.:

SCALE: As indicated

SHEET NO. **SX-9.10**

PRINTED ON: 9/4/2024 1:13:37 PM

R:\ConXCAD\1.0 ConXR200 Drawings\1.3 Revit\1.1.3.1 Current\2024.07.22_Rev2_SDR-0054\R200_Rev2.rvt